MANIACCESS - 120 AETJ C
120 AETJ C 3D

Self-propelled electric articulating boom lift

- Working height : 11.95 m
- Maximum outreach : 7.00 m
- Up and over : 4.77 m
- Overall width : 1.20 m
- 3D option : Jib rotation

UTLEIE UNDENTERET

COMPACT

MANITOU

120 AETJ C *Compact*
120 AETJ C 3*D Compact*

Working height .....11.95 m
Platform height.....9.95 m
Horizontal outreach .....7.00 m
Up and over height .....4.77 m
Jib movement.....+70° / -70°
Option 3D.....+70° / -70°
Basket rotation.....140°
Turret rotation .....350°

Platform capacity.....200 kg/2 peoples
External use.....45 km/h
(Maximum allowed wind speed)
Basket size.....1.20 x 0.96 m

❶ **Width** .....1.20 m
❷ **Length**.....5.48 m
❸ **Stowed length** (storage) .....3.74 m
❹ **Height** .....1.99 m
❺ **Stowed height** (storage) .....2.16 m

❻ **Turning radius inside** .....1.55 m
❼ **Turning radius outside** .....3.25 m
❽ **Turning radius outside** (basket).....3.34 m
❾ **Ground clearance** .....0.10 m
❿ **Wheel base** .....1.65 m
Drive speed .....6.0 km/h
Working speed .....0.6 km/h

Gradeability.....25%
Maximum slope accepted .....5% or 3°

Weight.....6 550 kg

Tires.....0.60 x 0.19 m
Wheel steer.....2 (front)
Wheel drive.....2 (back)

Batteries.....300 Ah / 2x24 V
Battery charger.....45 Ah/48 V

Standard equipment

- Electrical battery traction
- Negative brakes
- Lifting brackets
- Hour meter
- Warning buzzer in the basket
- 220 V predisposal
- Voltage indicator
- Safety manual pump
- Basket with mesh floor
- Bus CAN technology
- Diagnostic help integrated
- Dual electrical motors
- Rubber and no marking tires
- Anti-roll system
- Integrated charger

Options

- Jib rotation (3D)

- High capacity battery (360 Ah)
- Dual voltage charger 110 V / 230 V
- Working lights
- Electric plug in the platform with circuit breaker (230 V)
- Flashing light
- Drive alarm
- All motion alarm
- Cold conditions –25°C
- Air predisposal
- Water predisposal
- Specific painting
- Biodegradable oil

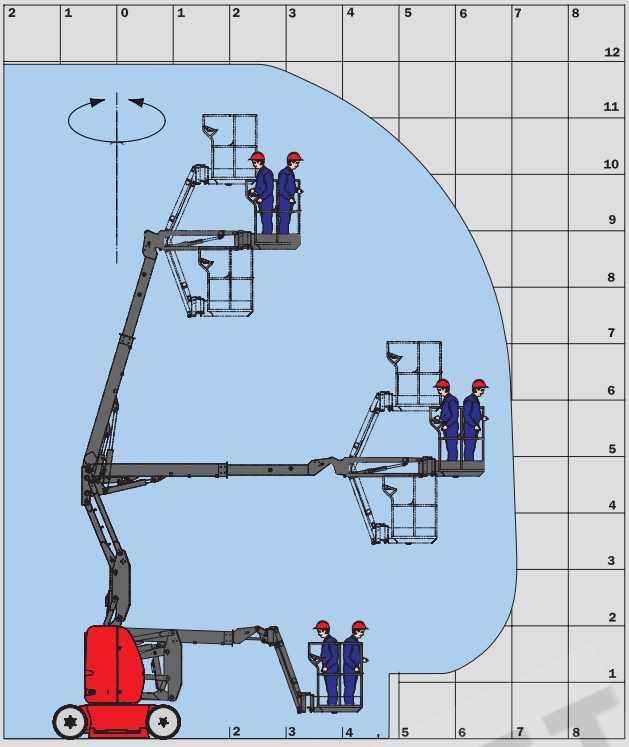

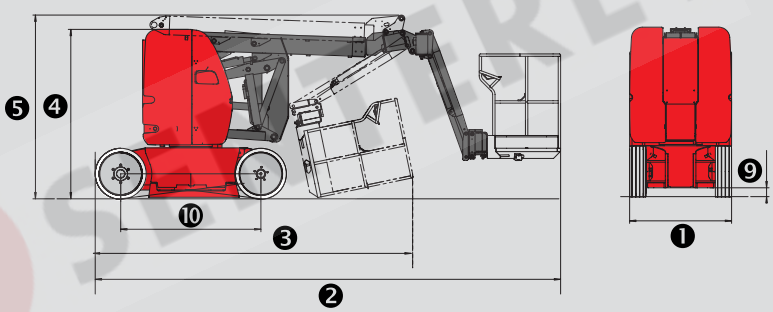

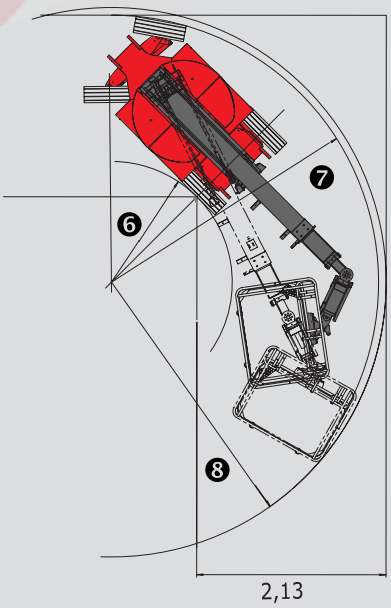

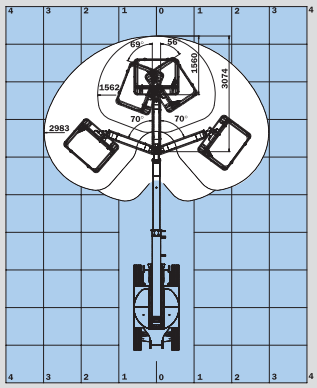

Option 3D : Jib rotation

The equipment supplied with each model may differ from that described in this leaflet.
For more details, contact your MANITOU dealer.

MANITOU BF SA
B.P. 249 - 44158 Ancenis Cedex - France
Tél. : 33 2 40 09 10 11 / Export Department Fax : 33 2 40 09 10 97
www.manitou.com

700364EN

UFIEU SECRET