Engine powered forklift 1.5 - 3.5 ton

TONERO

TOYOTA

MATERIAL HANDLING

www.toyota-forklifts.eu

Engine powered forklift 2.5 ton

Truck specifications					02-8FGF25	02-8FDF25	52-8FDF25
Identification	1.1	Manufacturer			TOYOTA	TOYOTA	TOYOTA
	1.2	Model			02-8FGF25	02-8FDF25	52-8FDF25
	1.3	Drive			LPG	Diesel	Diesel
	1.4	Operator type			Rider seated	Rider seated	Rider seated
	1.5	Load capacity/rated load	Q	kg	2500	2500	2500
	1.6	Load centre	c	mm	500	500	500
	1.8	Load distance, centre of drive axle to fork	x	mm	470	470	470
	1.9	Wheelbase	y	mm	1650	1650	1650
Weight	2.1	Service weight		kg	3560	3600	3620
	2.2	Axle load, with load, front/rear		kg	5280/780	5300/800	5310/810
	2.3	Axle load, without load, front/rear		kg	1300/2260	1320/2280	1330/2290
Tyres	3.1	Tyre - pneumatic (P), pneumatic shaped cushion (SE), solid rubber (R)			SE	SE	SE
	3.2	Tyre size, front			7.00-12	7.00-12	7.00-12
	3.3	Tyre size, rear			6.00-9	6.00-9	6.00-9
	3.5	Wheels, number front/rear (x=driven wheels)			2x/2	2x/2	2x/2
	3.6	Track width, front	b_{10}	mm	960	960	960
	3.7	Track width, rear	b_{11}	mm	965	965	965
Dimensions	4.1	Tilt of mast/fork carriage forward/backward	a/b	deg	6/11	6/11	6/11
	4.2	Height, mast lowered	h_1	mm	1995	1995	1995
	4.3	Free lift	h_2	mm	150	150	150
	4.4	Lift	h_3	mm	2960	2960	2960
		Lift height	h_{23}	mm	3000	3000	3000
	4.5	Height, mast extended	h_4	mm	4250	4250	4250
	4.7	Height of overhead guard (cab)	h_6	mm	2110	2110	2110
	4.8	Seat height/stand height	h_7	mm	1050	1050	1050
	4.12	Coupling height	h_{10}	mm	315	315	315
	4.19	Overall length	l_1	mm	3640	3640	3640
	4.20	Length to face of forks	l_2	mm	2640	2640	2640
	4.21	Overall width	b_1	mm	1150	1150	1150
	4.22	Fork dimensions	s/e/l	mm	40/100/1000	40/100/1000	40/100/1000
	4.23	Fork carriage DIN 15 173, class/type A, B			IIA	IIA	IIA
	4.24	Fork-carriage width	b_3	mm	1020	1020	1020
	4.31	Ground clearance, with load, below mast	m_1	mm	90	90	90
	4.32	Ground clearance, centre of wheelbase	m_2	mm	135	135	135
	4.33	Aisle width for pallets 1000 x 1200 crossways	A_{st}	mm	3950	3950	3950
	4.34	Aisle width for pallets 800 x 1200 lengthways	A_{st}	mm	4150	4150	4150
	4.35	Turning radius	W_a	mm	2280	2280	2280
	4.36	Internal turning radius	b_{13}	mm	745	745	745
Performance data	5.1	Travel speed, with/without load		km/h	17,5/18	17,0/17,5	19/19,5
	5.2	Lift speed, with/without load		m/s	0,60/0,64	0,56/0,60	0,62/0,66
	5.3	Lowering speed, with/without load		m/s	0,50/0,50	0,50/0,50	0,50/0,50
	5.6	Max. drawbar pull, with/without load		N	18500/8500	17400/8500	19200/8700
	5.7	Gradeability, with load [1) 2)]		%	29	27	28
	5.8	Max. gradeability, with/without load [2)]		%	33/19	31/19	31/19
	5.10	Service brake			Hydraulic	Hydraulic	Hydraulic
Combustion engine	7.1	Engine manufacturer/type			Toyota 4Y-ECS	Toyota 1DZ-III (IIIA)	Toyota 1ZS (IIIB)
	7.2	Engine power acc. to ISO 1585		kW	38	36	41
	7.3	Rated speed		1/min	2570	2500	2200
	7.4	No. of cylinders/displacement		cm^3	4/2237	4/2486	3/1795
	7.5a	Fuel consumption according to VDI 60		l/h	—	3,6	2,9
	7.5b	Fuel consumption according to VDI 60		kg/h	2,9	—	—
Others	8.2	Operating pressure for attachments		bar	147	147	147
	8.3	Oil volume for attachments		l/min	65-71	65-77	65-82
	8.4	Sound level at the driver's ear according to EN 12 053		dB(A)	77	79	77

[1)] At 1,5 km/h
[2)] Computed values

Performance data and dimensions are nominal and subject to tolerances.
Specifications are subject to change without notice.
Please obtain the latest specifications before contracting products.

Mast dimensions and rated capacities

Model			V								FV					FSV						
8FG/DF25	Lift height	h_{23}	3000	3300	3500	3700	4000	4500	5000	5500	3000	3300	3500	3700	4000	4300	4700	5000	5500	6000	6500	7000
	Lift	h_3	2960	3260	3460	3660	3960	4460	4960	5460	2960	3260	3460	3660	3960	4260	4660	4960	5460	5960	6460	6960
	Height, mast lowered	h_1	1995	2145	2245	2405	2595	2845	3095	3345	1995	2145	2245	2405	2595	1995	2145	2245	2405	2595	2845	3095
	Height, mast extended [1]	h_4	3700	4000	4200	4400	4700	5200	5700	6200	3625	3925	4125	4325	4625	4900	5300	5600	6100	6600	7100	7600
	Height, mast extended [2]	h_4	4250	4550	4750	4950	5250	5750	6250	6750	4240	4540	4740	4940	5240	5540	5940	6240	6740	7240	7740	8240
	Free lift, without load backrest	h_2	150	150	150	150	150	150	150	150	1400 [1220]	1550 [1370]	1650 [1470]	1810 [1630]	2000 [1820]	1425	1575	1675	1835	2025	2275	2525
	Free lift, with load backrest	h_2	150	150	150	150	150	150	150	150	785	935	1035	1195	1385	785	935	1035	1195	1385	1635	1885

1) Without load backrest

2) With load backrest; Height of standard load backrest is 1220 mm.

Data in [ ] are for when "A4 piping" is selected.

Single tyre			V								FV					FSV						
8FG/DF25	Tilt range, forward	deg	6	6	6	6	6	6	6	—	6	6	6	6	6	6	6	6	6	6	6	—
	Tilt range, backward	deg	11(6)	11(6)	11(6)	11(6)	9	6	6	—	11(6)	11(6)	11(6)	11(6)	9	6	6	6	6	6	6	—
	Load capacity, P tyres at 500 mm LC	kg	2500	2500	2500	2500	2500	2150	1700	—	2500	2500	2500	2500	2500	2300	2000	1500	1250	900	650	—
	Load capacity, SE tyres at 500 mm LC	kg	2500	2500	2500	2500	2500	2300	1850	—	2500	2500	2500	2500	2500	2300	2000	1650	1400	1050	750	—

Dual tyre			V								FV					FSV						
8FG/DF25	Tilt range, forward	deg	6	6	6	6	6	6	6	6	6	6	6	6	6	6	6	6	6	6	6	6
	Tilt range, backward	deg	11(6)	11(6)	11(6)	11(6)	11(6)	11(6)	6	6	11(6)	11(6)	11(6)	11(6)	11(6)	6	6	6	6	6	6	6
	Load capacity, P/SE tyres at 500 mm LC	kg	2500	2500	2500	2500	2500	2450	2400	2300	2500	2500	2500	2500	2500	2500	2450	2400	2050	1700	1550	1200

Data in ( ) are for when "Cabin Series" is selected (minimum front windshield).

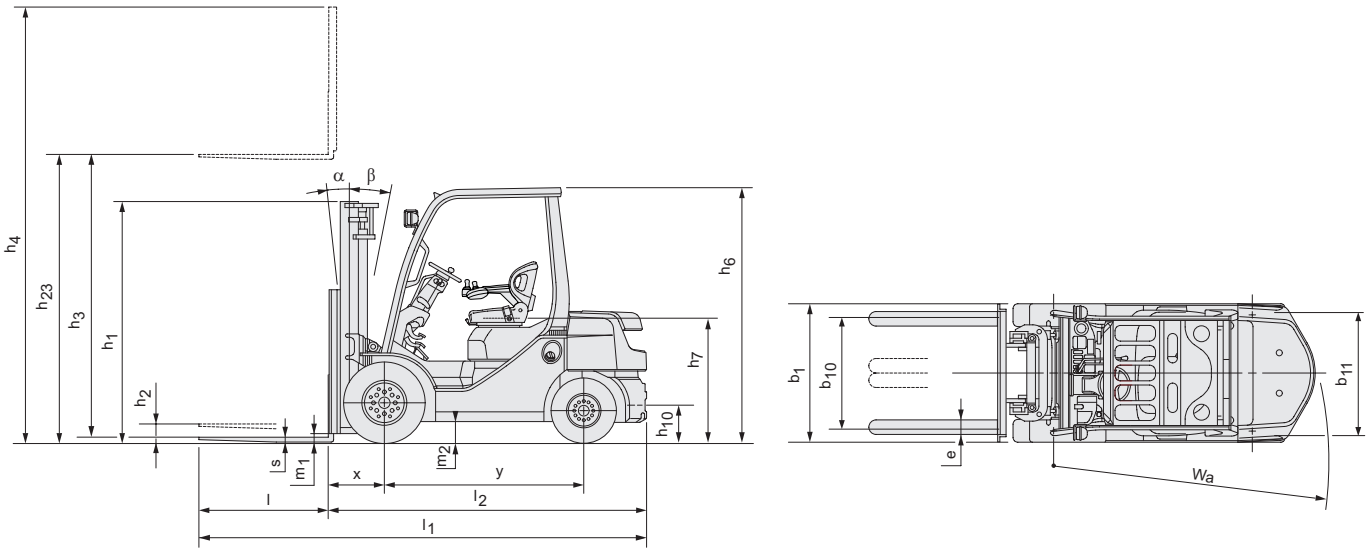

Standard equipments:

- Toyota SAS (System of Active Stability*)
- Toyota OPS (Operator Presence Sensing)
- Toyota ORS seat (Operator Restraint System)
- Wide visible mast (V3000 mm)
- Load backrest (Height: 1220 mm)
- Long forks (Length: 1000 mm)
- Long forkbar [Length: 920 mm (8FG/DF15.18); 1020 mm (8FG/DKF20, 8FG/ DF20.25); 1070 mm (8FG/DF30,8FG/DJF35)]
- 3-way valve (A400)
- Dual brake system
- Pneumatic shaped cushion tyres
- Full hydraulic power steering
- 7” cyclone air cleaner with snorkel air intake
- Anti-restart ignition key switch
- Long life coolant 50%
- Headlights
- Rear combination lights
- Combination meter including self diagnostic system
- Adjustable tilt steering column
- Polycarbonate roof
- Tilt cylinder boots (STD on 1ZS engine only)

* = When dual tyres are selected, the Active Control Rear Stabilizer function of the SAS system of Active Stability (SAS) is not included.

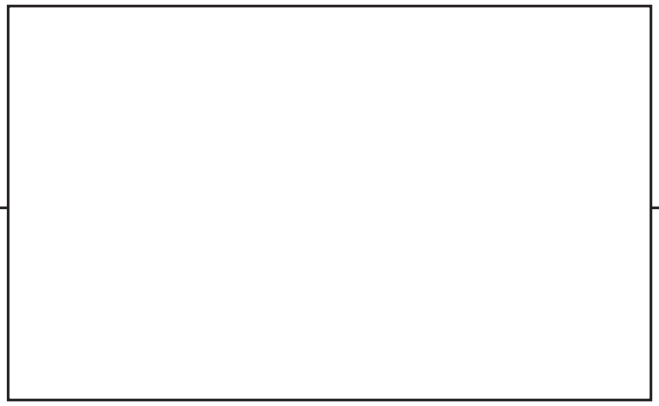

TP-Technical Publications, Sweden — 745562-040, version 6, 1409